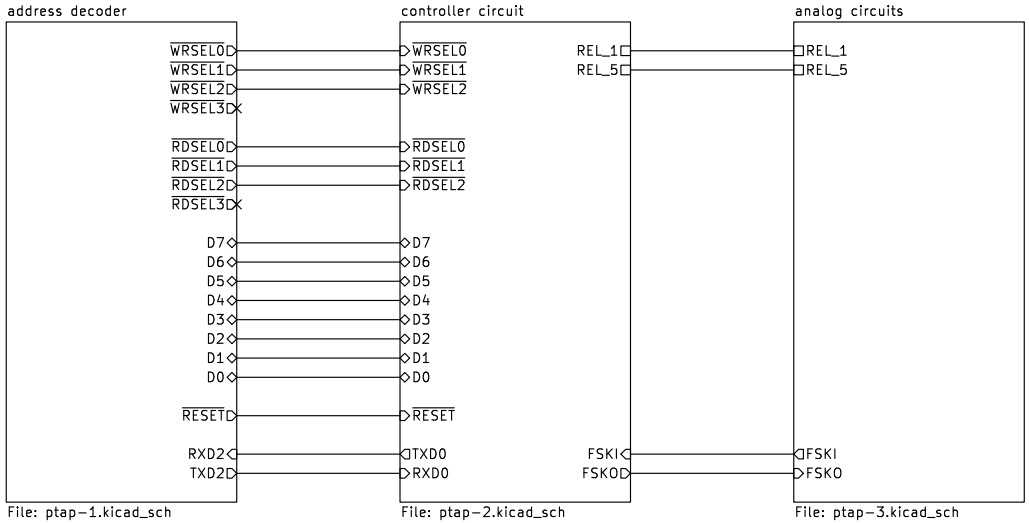

Zacchaeus Microcomputer

Pozsar Zsolt

Sheet: /

File: ptap.kicad_sch

Title: PTAP – Tape and speaker interface

Size: A4	Date: 2026-04-03	**Rev: 1.0**
KiCad E.D.A. 9.0.6		Id: 1/4

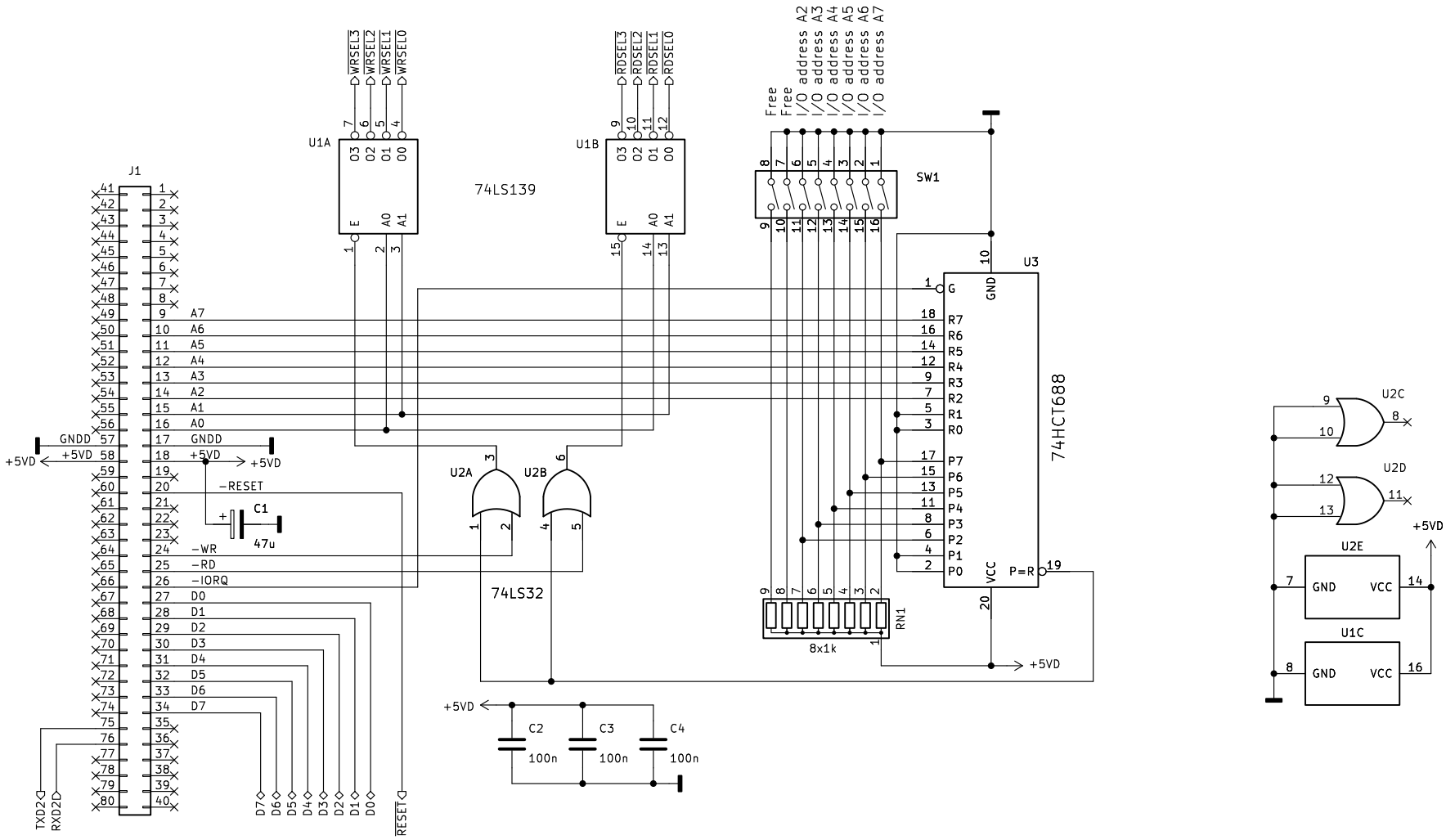

Address decoder
Zacchaeus Microcomputer
Pozsar Zsolt

Sheet: /address decoder/
File: ptap−1.kicad_sch

Title: PTAP − Tape and speaker interface

Size: A4	Date: 2026−04−03	**Rev: 1.0**
KiCad E.D.A. 9.0.6		Id: 2/4

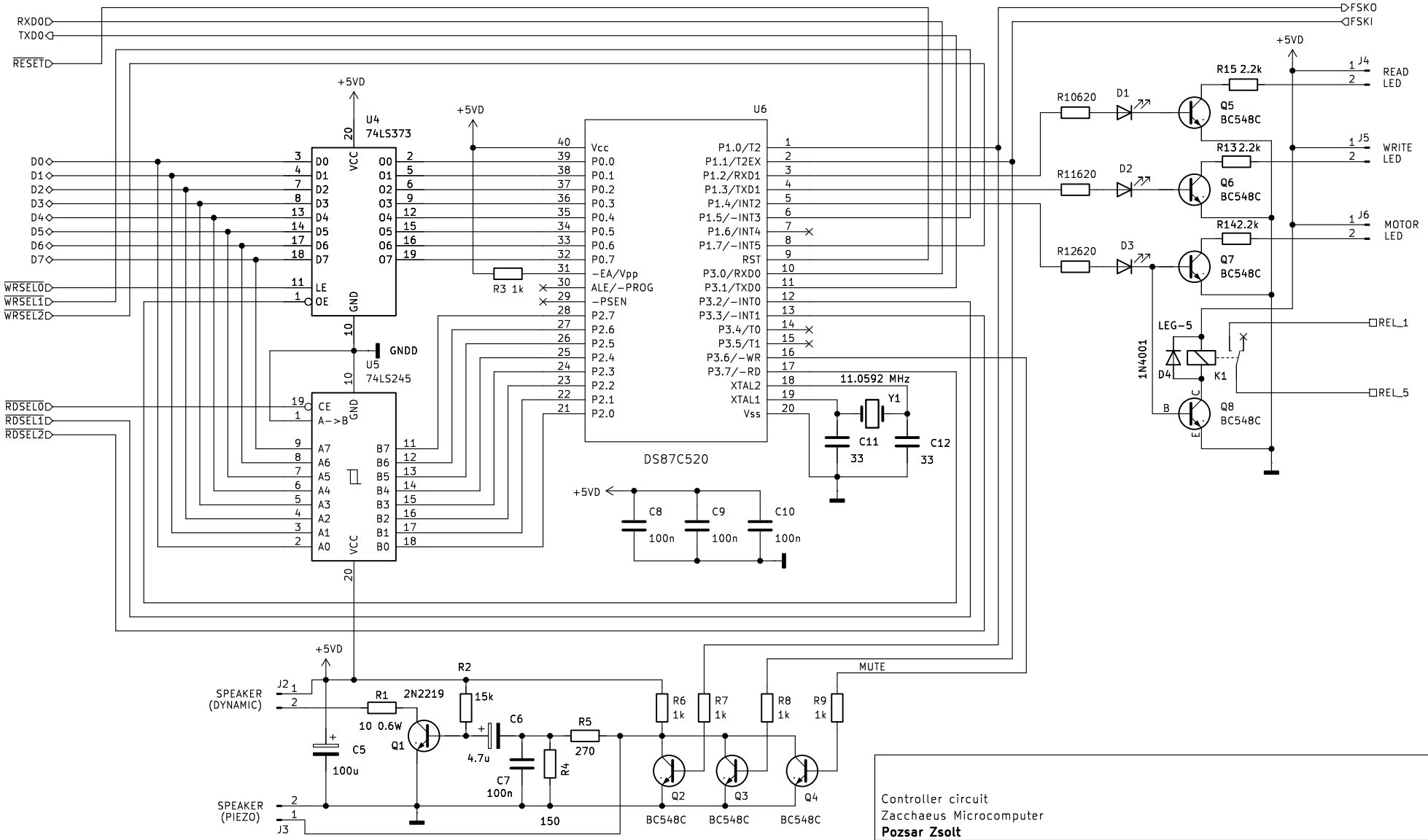

Controller circuit
Zacchaeus Microcomputer
Pozsar Zsolt

Sheet: /controller circuit/
File: ptap-2.kicad_sch

Title: PTAP – Tape and speaker interface

Size: A4	Date: 2026-04-03	**Rev: 1.0**
KiCad E.D.A. 9.0.6		Id: 3/4

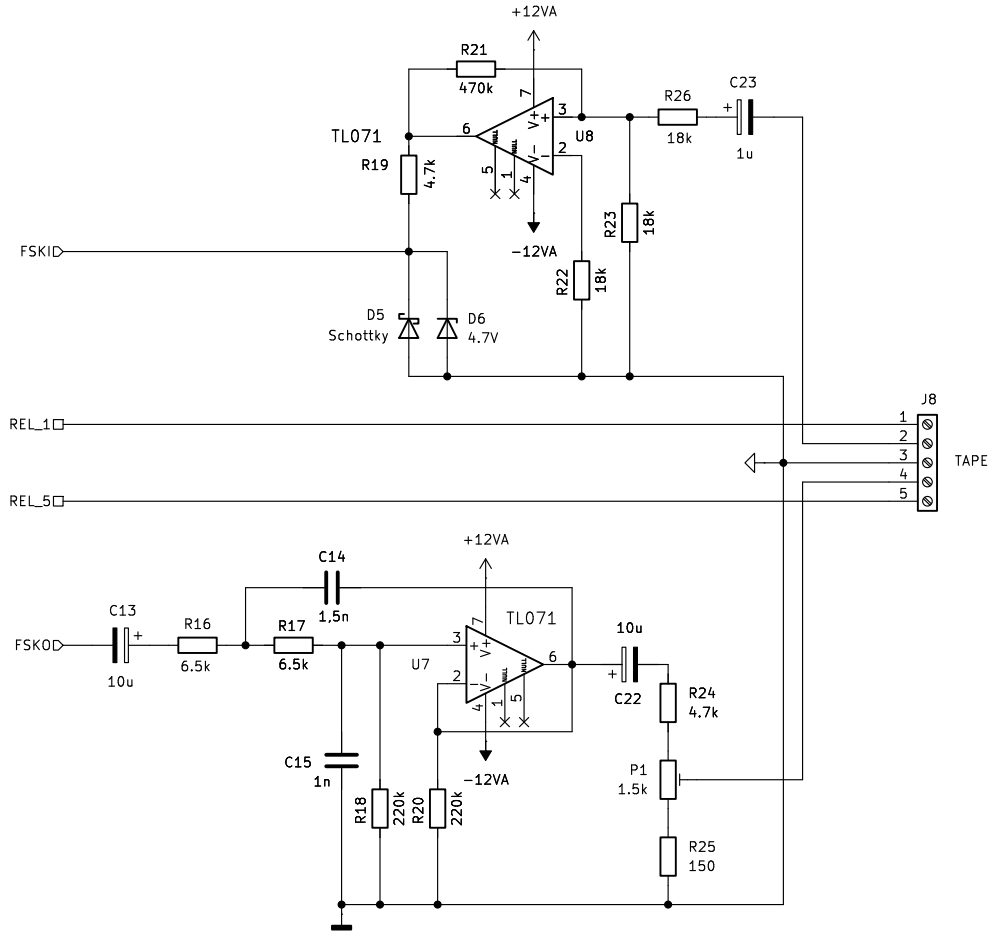

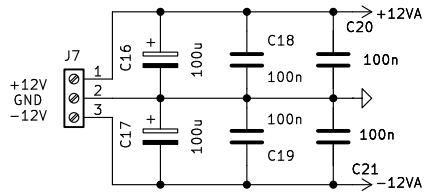

Analog circuit
Zacchaeus Microcomputer
Pozsar Zsolt

Sheet: /analog circuits/
File: ptap−3.kicad_sch

Title: PTAP − Tape and speaker interface

Size: A4	Date: 2026−04−03	**Rev: 1.0**
KiCad E.D.A. 9.0.6		Id: 4/4